Solutions - Final Exam

(December 10th @ 7:00 pm)

Presentation and clarity are very important! Show your procedure!

Problem 1 (11 pts)

- Given the following circuit, complete the timing diagram.
  The LUT 6-to-6 implements the following function: $OLUT = |ILUT|$ (absolute value), where $ILUT$ is a 6-bit signed (2C) number, and $OLUT$ is a 6-bit unsigned number.
  For example $ILUT = -29 = 100011_2 \rightarrow OLUT = |-29| = 29\ (011101_2)$

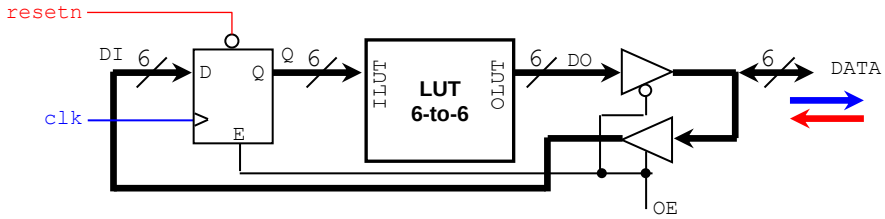

$|-21| = 21$

$|26| = 26$

$|-16| = 16$

$|-32| = 32$

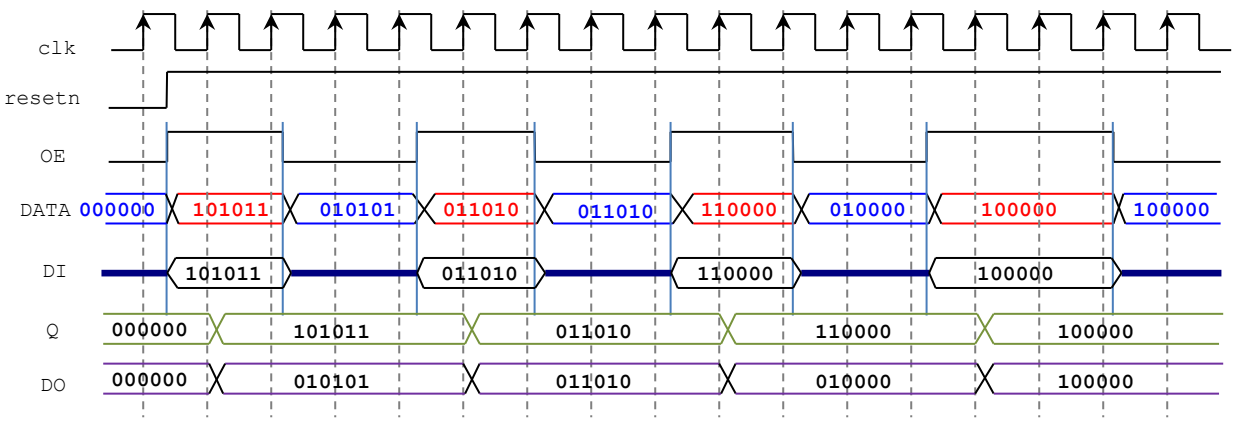

Problem 2 (12 pts)

- Complete the timing diagram of the following circuit. $G = G_3G_2G_1G_0 = 0110$, $Q = Q_3Q_2Q_1Q_0$

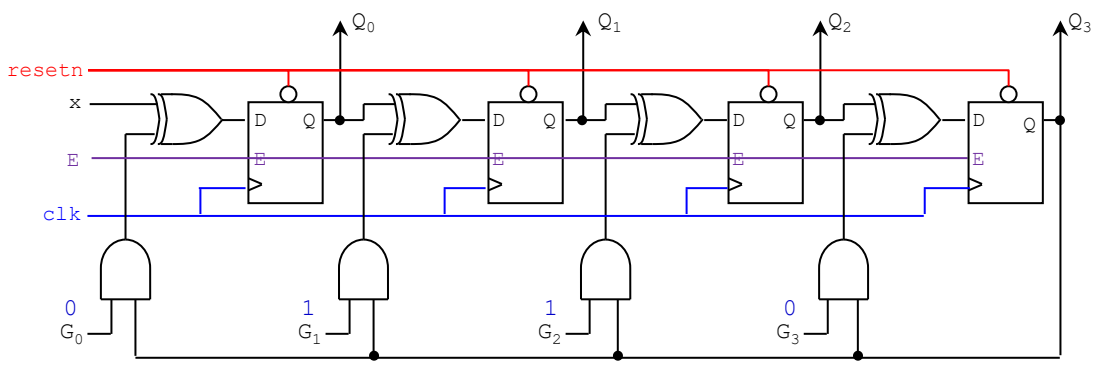

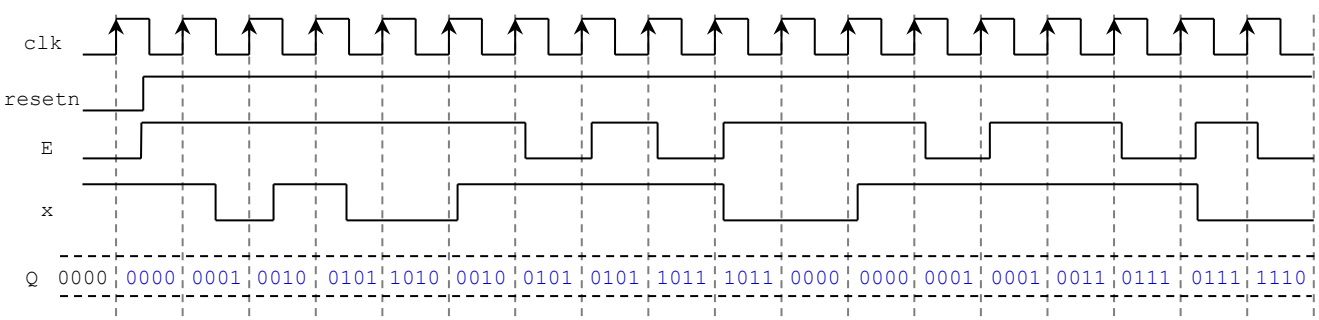

PROBLEM 3 (24 PTS)

- Sequence detector: The machine generates $z = 1$ when it detects the sequence 0100. Once the sequence is detected, the circuit looks for a new sequence.
- The signal E is an input enable: It validates the input x, i.e., if E=1, x is valid, otherwise x is not valid.

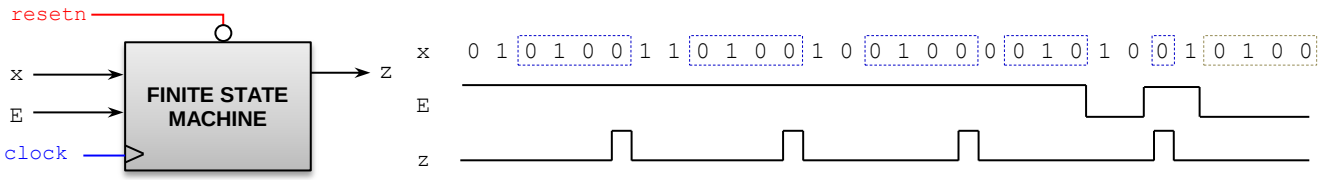

- Draw the State Diagram (any representation) of this circuit with inputs E and x and output z. (7 pts)
- Complete the State Table and the Excitation Table (8 pts.)
- Provide the excitation equations and the Boolean output equation (simplify your circuit: K-maps or Quine-McCluskey).
- Sketch the circuit. (3 pts)
- Which type is this FSM? ~~(Mealy)~~ (Moore) Why? _____

- *State Diagram, State Table, and Excitation Table*:

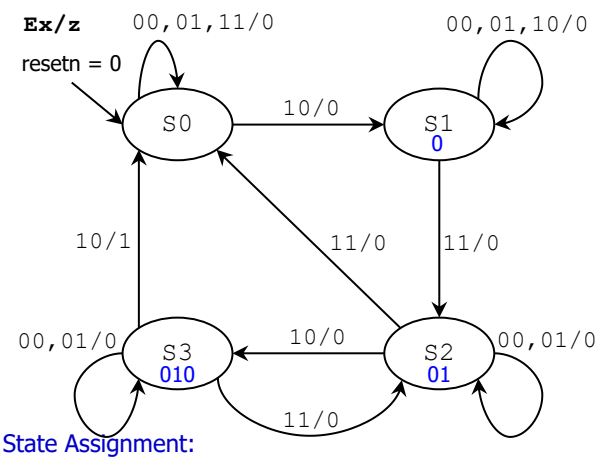

State Assignment:
S0: Q=00 S1: Q=01
S2: Q=10 S3: Q=11

E	x	PRESENT STATE	NEXT STATE	z
0	0	S0	S0	0
0	0	S1	S1	0
0	0	S2	S2	0
0	0	S3	S3	0
0	1	S0	S0	0
0	1	S1	S1	0
0	1	S2	S2	0
0	1	S3	S3	0
1	0	S0	S1	0
1	0	S1	S1	0
1	0	S2	S3	0
1	0	S3	S0	1
1	1	S0	S0	0
1	1	S1	S2	0
1	1	S2	S0	0
1	1	S3	S2	0

PRESENT STATE				NEXTSTATE		
E	x	Q_1	Q_0 (t)	Q_1	Q_0 (t+1)	z
0	0	0	0	0	0	0
0	0	0	1	0	1	0
0	0	1	0	1	0	0
0	0	1	1	1	1	0
0	1	0	0	0	0	0
0	1	0	1	0	1	0
0	1	1	0	1	0	0
0	1	1	1	1	1	0
1	0	0	0	0	1	0
1	0	0	1	0	1	0
1	0	1	0	1	1	0
1	0	1	1	0	0	1
1	1	0	0	0	0	0
1	1	0	1	1	0	0
1	1	1	0	0	0	0
1	1	1	1	1	0	0

This is a Mealy Machine. The output z depends on the input as well as on the present state.

- *Excitation equations, minimization, and circuit implementation*:

$$Q_1(t+1) \leftarrow \bar{E}Q_1 + ExQ_0 + \bar{x}Q_1\overline{Q_0}$$
$$Q_0(t+1) \leftarrow \bar{E}Q_0 + E\bar{x}\overline{Q_1} + E\bar{x}\overline{Q_0}$$
$$z = E\bar{x}Q_1Q_0$$

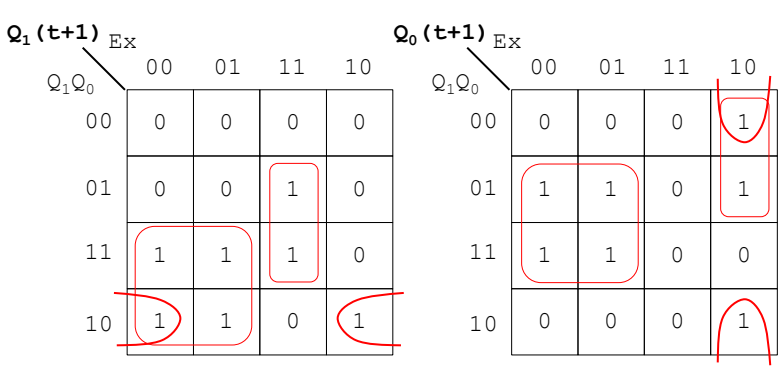

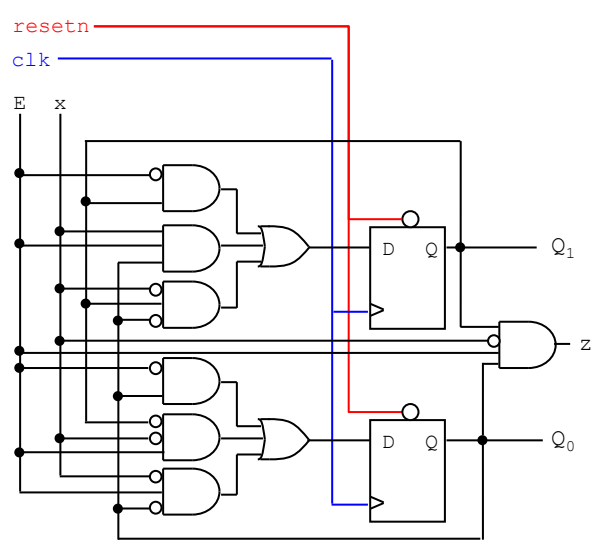

PROBLEM 4 (22 PTS)

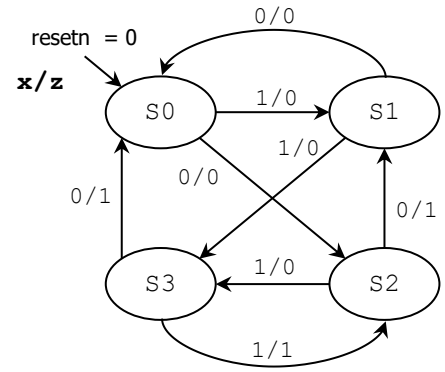

a) Given the following State Machine Diagram: (11 pts)
- ✓ Provide the State Table and the Excitation Table (4 pts.)
- ✓ Get the excitation equations and the Boolean equation for z. (3 pts.)
  Use S0 (Q=00), S1 (Q=01), S2 (Q=10), S3 (Q=11) to encode the states.
- ✓ Sketch the Finite State Machine circuit. (3 pts.)
- ✓ Which type is this FSM? ~~(Mealy)~~ (Moore)

x	PRESENT STATE	NEXT STATE	z
0	S0	S2	0
0	S1	S0	0
0	S2	S1	1
0	S3	S0	1
1	S0	S1	0
1	S1	S3	0
1	S2	S3	0
1	S3	S2	1

x	PRESENT STATE $Q_1Q_0(t)$	NEXTSTATE $Q_1Q_0(t+1)$	z
0	0 0	1 0	0
0	0 1	0 0	0
0	1 0	0 1	1
0	1 1	0 0	1
1	0 0	0 1	0
1	0 1	1 1	0
1	1 0	1 1	0
1	1 1	1 0	1

$Q_1(t+1) \leftarrow \overline{(Q_1+Q_0)\oplus x}$
$Q_0(t+1) \leftarrow x\overline{Q_1} + Q_1\overline{Q_0}$
$z = \bar{x}Q_1 + Q_1Q_0$

State Assignment:
S0: Q=00 S1: Q=01
S2: Q=10 S3: Q=11

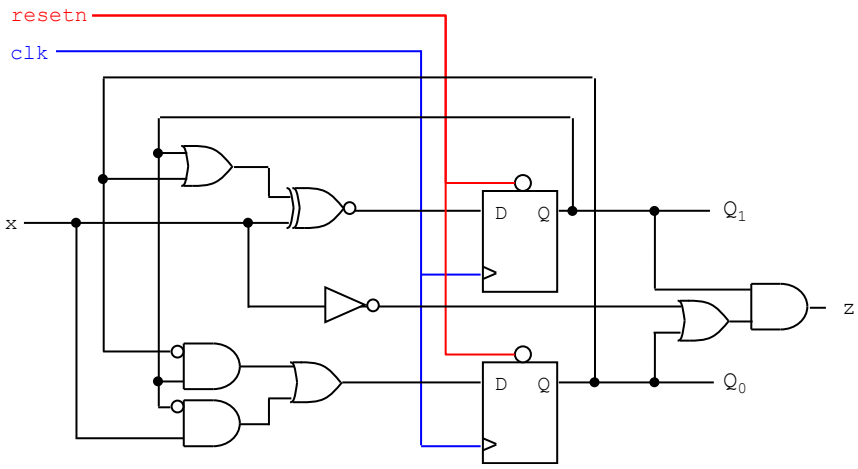

b) A synchronous circuit (with *resetn* and *clock*), is described by these excitation equations (E is a synchronous input): (11 pts.)

$$Q_1(t+1) \leftarrow Q_1(t).\overline{Q_0(t)} + \bar{E}.Q_1(t) + \overline{Q_1(t)}.Q_0(t)$$
$$Q_0(t+1) \leftarrow E.Q_0(t) + \bar{E}.\overline{Q_0(t)}$$

- ✓ With flip flops and logic gates, sketch the circuit.

$Q_1(t+1) \leftarrow Q_1(t)\oplus Q_0(t) + \bar{E}.Q_1(t)$
$Q_0(t+1) \leftarrow \overline{E\oplus Q_0(t)}$

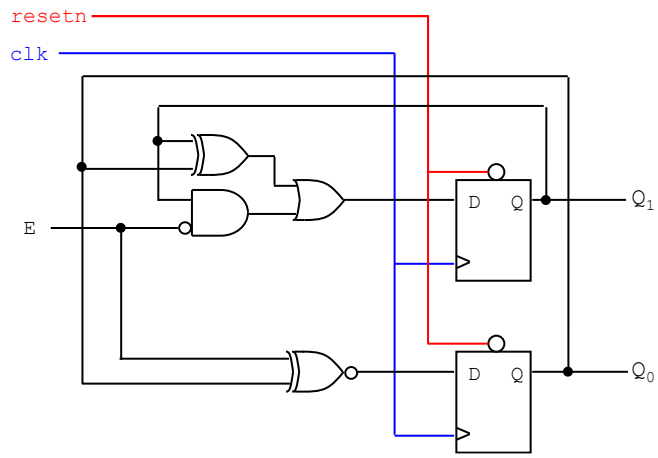

- ✓ Complete the timing diagram. $Q = Q_1Q_0$ (Tip: get the excitation table) (6 pts)

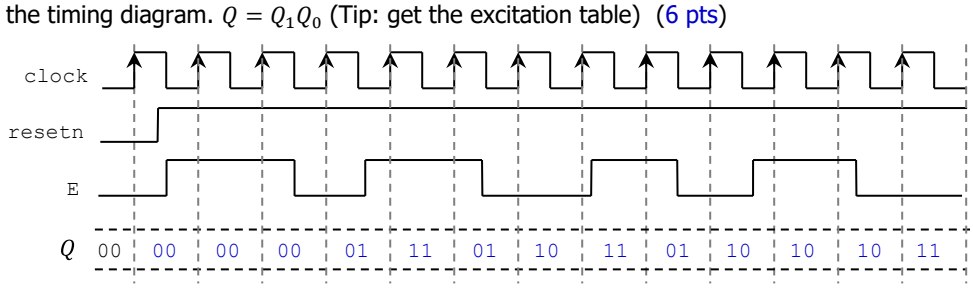

PROBLEM 5 (13 PTS)

- Draw the State Diagram (in ASM form) of the FSM whose VHDL description in shown below. (7 pts.)

```
library ieee;
use ieee.std_logic_1164.all;

entity circ is
   port ( clk, resetn: in std_logic;
          r, p, q: in std_logic;
          x, w, z: out std_logic);
end circ;
```

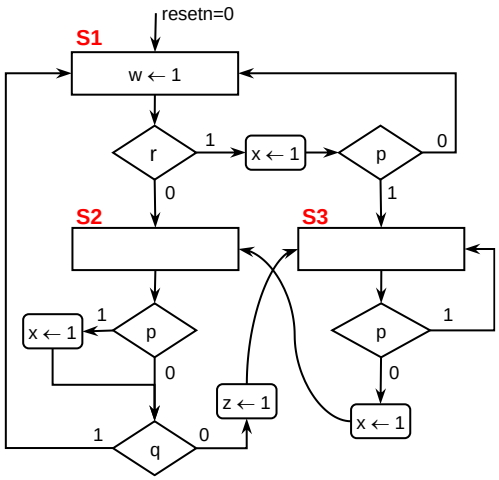


```
architecture behavioral of circ is
   type state is (S1, S2, S3);
   signal y: state;
begin
  Transitions: process (resetn, clk, r, p, q)
  begin
     if resetn = '0' then y <= S1;
     elsif (clk'event and clk = '1') then
        case y is
          when S1 =>
            if r = '0' then
               y <= S2;
            else
               if p = '1' then y <= S3; else y <= S1; end if;
            end if;

          when S2 =>
            if q = '1' then y <= S1; else y <= S3; end if;

          when S3 =>
            if p = '1' then y <= S3; else y <= S2; end if;
        end case;
     end if;
  end process;

  Outputs: process (y, r, p, q)
  begin
      x <= '0'; w <= '0'; z <= '0';
      case y is
         when S1 => w <= '1';
                    if r = '1' then x <= '1'; end if;

         when S2 => if p = '1' then x <= '1'; end if;
                    if q = '0' then z <= '1'; end if;

         when S3 => if p = '0' then x <= '1'; end if;
      end case;
  end process;
end behavioral;
```

- The figure shows an FSM model representing the circuit described in VHDL.
  The state (signal 'y' in the VHDL code) is represented by the bits Q_1 and Q_0.

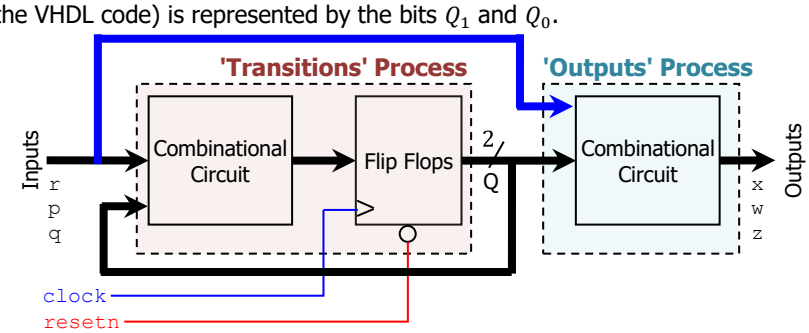

✓ If we use S1 (Q=00), S2 (Q=01), S3 (Q=10) to encode the states, what is the Boolean equation for w? (2 pts.)

$w = \overline{Q_1(t)}.\overline{Q_0(t)}$

✓ Circle the correct answer: (4 pts.)

▫ The 'Outputs' process outputs depend on clock and resetn?	TRUE	~~FALSE~~
▫ The relationship between [r,p,q, present state] and [next state] is described by:	~~Transitions Process~~	Outputs Process
▫ The relationship between [r,p,q, present state] and [outputs x,w,z] is described by:	Transitions Process	~~Outputs Process~~
▫ Is this a Mealy or a Moore FSM?	Moore	~~Mealy~~

PROBLEM 6 (18 PTS)

- Sequential unsigned multiplier: P = DA × DB. Behavior (on the clock tick) of the generic components:

$2n$-bit register (P): If E=0, the output is kept	Parallel access shift register (A: $2n$ bits, B: n bits): If E=0, the output is kept

`if E = 1 then`
`  if sclr = 1 then`
`  Q ← 0`
`  else`
`  Q ← D`
`  end if;`
`end if;`
	`if E = 1 then`
	`  if s_l = '1' then`
	`  Q ← D`
	`  else`
	`  Q ← shift in 'din' (to the left (A) or right (B))`
	`  end if;`
	`end if;`
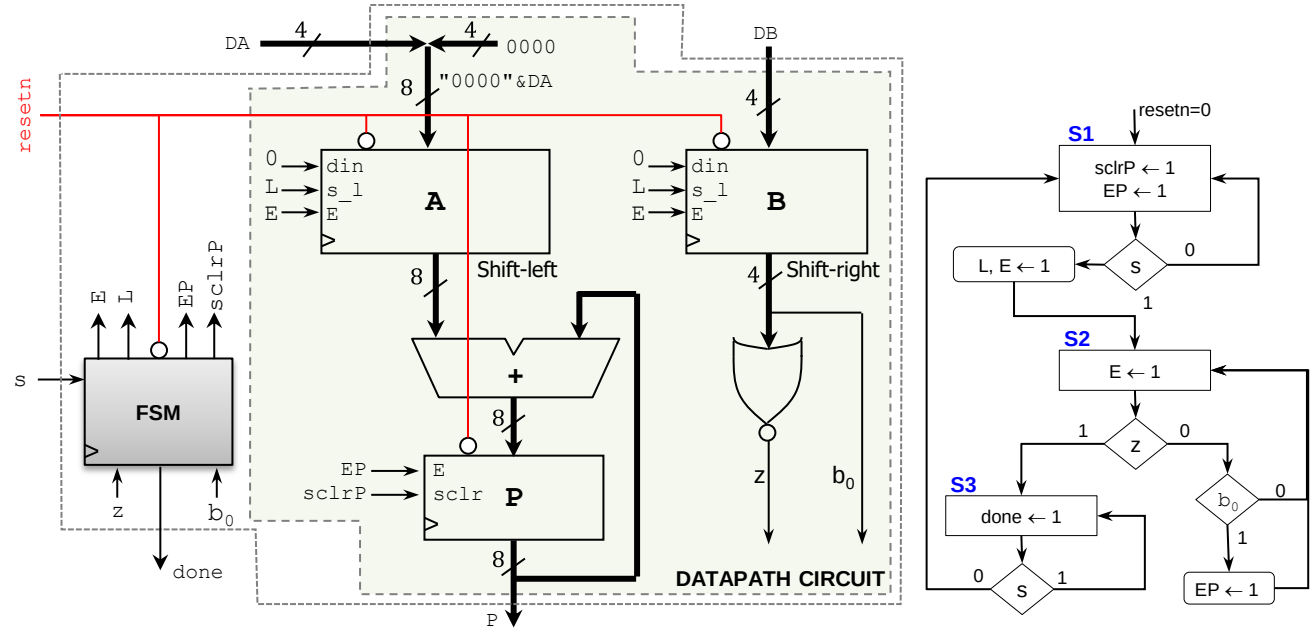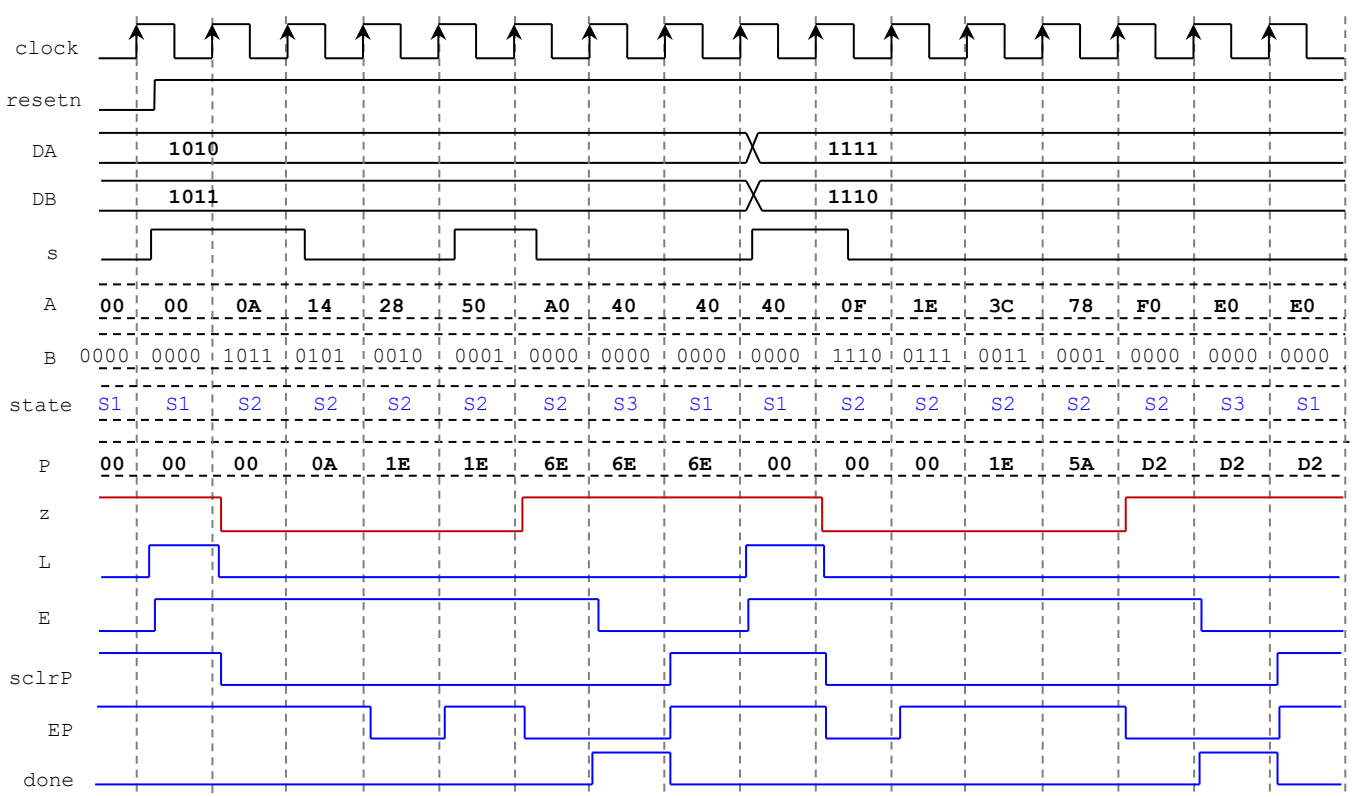
- Complete the timing diagram. A and P are specified in hexadecimal format, while B is in binary format.